SECTION SC

STARTING & CHARGING SYSTEM

CONTENTS

PRECAUTIONS **2**
Precautions for Supplemental Restraint System (SRS) “AIR BAG” and “SEAT BELT PRE-TENSIONER” 2
Wiring Diagrams and Trouble Diagnosis 2
PREPARATION **3**
Special Service Tools 3
Commercial Service Tools 3
BATTERY **4**
How to Handle Battery 4
METHODS OF PREVENTING OVER-DISCHARGE 4
CHECKING ELECTROLYTE LEVEL 5
SPECIFIC GRAVITY CHECK 5
CHARGING THE BATTERY 6
Trouble Diagnoses with Battery/Starting/Charging System Tester 6
DIAGNOSTIC RESULT ITEM CHART 8
Removal and Installation 8
STARTING SYSTEM **9**
System Description 9
M/T MODELS 9
A/T MODELS 9
Wiring Diagram — START — / M/T Models 10
Wiring Diagram — START — / A/T Models 11
Trouble Diagnoses with Battery/Starting/Charging System Tester 12
DIAGNOSTIC RESULT ITEM CHART 12
WORK FLOW 13
DIAGNOSTIC PROCEDURE 1 14
DIAGNOSTIC PROCEDURE 2 15
MINIMUM SPECIFICATION OF CRANKING VOLTAGE REFERENCING COOLANT TEMPERATURE 15
Removal and Installation 16
M/T MODELS 16
A/T MODELS 17
Disassembly and Assembly 18
M/T MODELS 18
A/T MODELS 19
INSPECTION AFTER DISASSEMBLY 19
CHARGING SYSTEM **20**
System Description 20
DESCRIPTION 20
MALFUNCTION INDICATOR 20
Wiring Diagram — CHARGE — 21
Trouble Diagnoses with Battery/Starting/Charging System Tester 22
DIAGNOSTIC RESULT ITEM CHART 23
WORK FLOW 24
PRELIMINARY INSPECTION 25
DIAGNOSTIC PROCEDURE 1 26
DIAGNOSTIC PROCEDURE 2 26
DIAGNOSTIC PROCEDURE 3 27
DIAGNOSTIC PROCEDURE 4 28
Removal and Installation 29
REMOVAL 29
ALTERNATOR PULLEY INSPECTION 29
INSTALLATION 30
Disassembly and Assembly 30
DISASSEMBLY FOR ALTERNATOR PULLEY 30
ASSEMBLY FOR ALTERNATOR PULLEY 31
SERVICE DATA AND SPECIFICATIONS (SDS) **32**
Battery 32
Starter 32
Alternator 32

PRECAUTIONS

PFP:00011

Precautions for Supplemental Restraint System (SRS) “AIR BAG” and “SEAT BELT PRE-TENSIONER”

AKS00B6K

The Supplemental Restraint System such as “AIR BAG” and “SEAT BELT PRE-TENSIONER”, used along with a front seat belt, helps to reduce the risk or severity of injury to the driver and front passenger for certain types of collision. Information necessary to service the system safely is included in the SRS and SB section of this Service Manual.

WARNING:

- **To avoid rendering the SRS inoperative, which could increase the risk of personal injury or death in the event of a collision which would result in air bag inflation, all maintenance must be performed by an authorized NISSAN/INFINITI dealer.**
- **Improper maintenance, including incorrect removal and installation of the SRS, can lead to personal injury caused by unintentional activation of the system. For removal of Spiral Cable and Air Bag Module, see the SRS section.**
- **Do not use electrical test equipment on any circuit related to the SRS unless instructed to in this Service Manual. SRS wiring harnesses can be identified by yellow and/or orange harnesses or harness connectors.**

Wiring Diagrams and Trouble Diagnosis

AKS00B6L

When reading wiring diagrams, refer to the following:

- GI-14, "How to Read Wiring Diagrams" in GI section
- PG-2, "POWER SUPPLY ROUTING" for power distribution circuit in PG section

When performing trouble diagnosis, refer to the following:

- GI-10, "HOW TO FOLLOW TEST GROUPS IN TROUBLE DIAGNOSES" in GI section
- GI-26, "How to Perform Efficient Diagnosis for an Electrical Incident" in GI section

PREPARATION

PFP:00002

Special Service Tools

AKS00B6M

Tool number (Kent-Moore No.) Tool name	Description
KV10118200 (—) Alternator pulley adapter 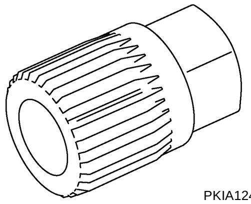 PKIA1241E	Removing alternator pulley
— (J-44373 Model 620) Battery/Starting/Charging system tester 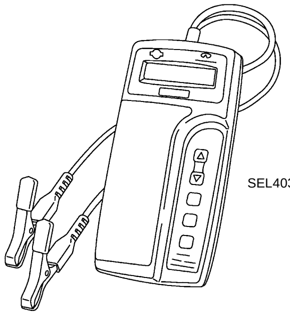 SEL403X	

Commercial Service Tools

AKS00BHE

Tool number Tool name	Description
Power tool 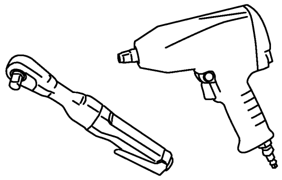 PBIC0190E	Loosening bolts and nuts

BATTERY

PFP:00011

How to Handle Battery

AKS00BHF

CAUTION:

- **If it becomes necessary to start the engine with a booster battery and jumper cables, use a 12-volt booster battery.**
- **After connecting battery cables, ensure that they are tightly clamped to battery terminals for good contact.**

METHODS OF PREVENTING OVER-DISCHARGE

The following precautions must be taken to prevent over-discharging a battery.

- The battery surface (particularly its top) should always be kept clean and dry.
- The terminal connections should be clean and tight.
- At every routine maintenance, check the electrolyte level.
  This also applies to batteries designated as “low maintenance” and “maintenance-free”.

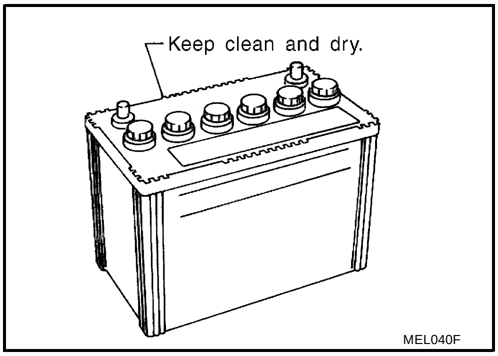

- When the vehicle is not going to be used over a long period of time, disconnect battery cable at negative terminal.

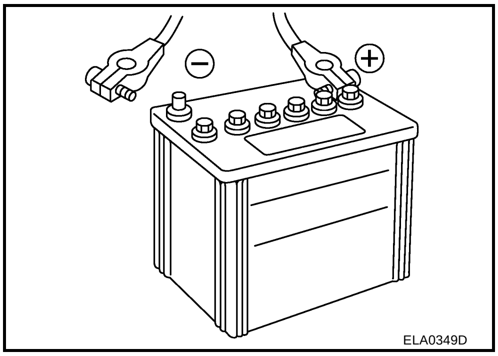

- Check the charge condition of the battery.
  Periodically check the specific gravity of the electrolyte. Keep a close check on charge condition to prevent over-discharge.

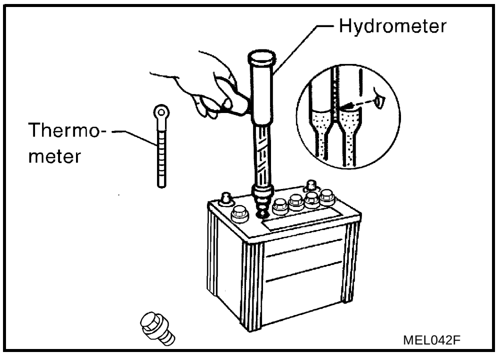

CHECKING ELECTROLYTE LEVEL

WARNING:

Do not allow battery fluid to come in contact with skin, eyes, fabrics, or painted surfaces. After touching a battery, do not touch or rub your eyes until you have thoroughly washed your hands. If acid contacts eyes, skin or clothing, immediately flush with water for 15 minutes and seek medical attention.

- Remove the cell plug using a suitable tool.
- Add distilled water up to the MAX level.

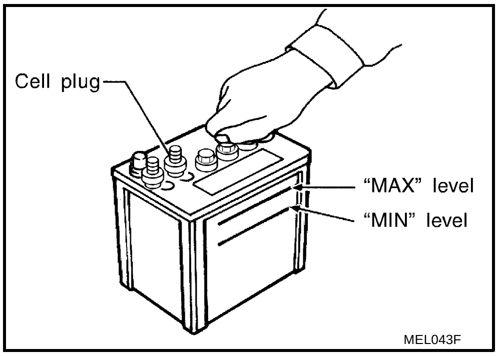

MEL043F

Sulphation

A battery will be completely discharged if it is left unattended for a long time and the specific gravity will become less than 1.100. This may result in sulphation on the cell plates.
To determine if a battery has been "sulphated", note its voltage and current when charging it. As shown in the figure, less current and higher voltage are observed in the initial stage of charging sulphated batteries.
A sulphated battery may sometimes be brought back into service by means of a long, slow charge, 12 hours or more, followed by a battery capacity test.

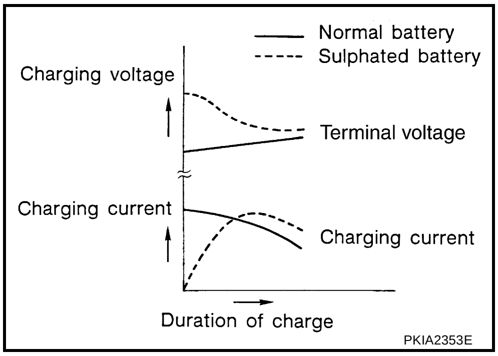

PKIA2353E

SPECIFIC GRAVITY CHECK

1. Read hydrometer and thermometer indications at eye level.
2. Use the chart below to correct your hydrometer reading according to electrolyte temperature.

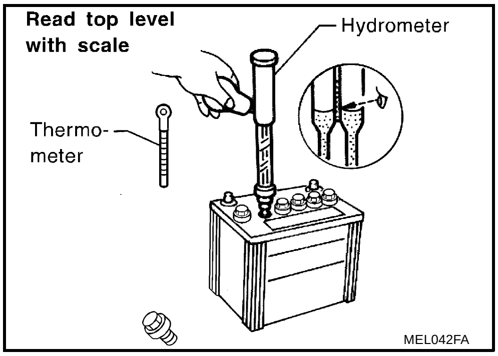

MEL042FA

Hydrometer Temperature Correction

Battery electrolyte temperature °C (°F)	Add to specific gravity reading
71 (160)	0.032
66 (150)	0.028
60 (140)	0.024
54 (130)	0.020
49 (120)	0.016
43 (110)	0.012
38 (100)	0.008
32 (90)	0.004
27 (80)	0
21 (70)	–0.004

Battery electrolyte temperature °C (°F)	Add to specific gravity reading
16 (60)	–0.008
10 (50)	–0.012
4 (40)	–0.016
–1 (30)	–0.020
–7 (20)	–0.024
–12 (10)	–0.028
–18 (0)	–0.032

Corrected specific gravity	Approximate charge condition
1.260 - 1.280	Fully charged
1.230 - 1.250	3/4 charged
1.200 - 1.220	1/2 charged
1.170 - 1.190	1/4 charged
1.140 - 1.160	Almost discharged
1.110 - 1.130	Completely discharged

CHARGING THE BATTERY

CAUTION:

- **Do not “quick charge” a fully discharged battery.**
- **Keep the battery away from open flame while it is being charged.**
- **When connecting the charger, connect the leads first, then turn on the charger. Do not turn on the charger first, as this may cause a spark.**
- **If battery electrolyte temperature rises above 55 °C (131 °F), stop charging. Always charge battery at a temperature below 55 °C (131 °F).**

Charging Rates

Amps	Time
50	1 hour
25	2 hours
10	5 hours
5	10 hours

Do not charge at more than 50 ampere rate.

NOTE:

The ammeter reading on your battery charger will automatically decrease as the battery charges. This indicates that the voltage of the battery is increasing normally as the state of charge improves. The charging amps indicated above refer to initial charge rate.

- If, after charging, the specific gravity of any two cells varies more than 0.050, the battery should be replaced.

Trouble Diagnoses with Battery/Starting/Charging System Tester

AKS00BHG

CAUTION:

When working with batteries, always wear appropriate eye protection.

NOTE:

- To ensure a complete and thorough diagnosis, the battery, starter and generator test segments must be done as a set from start to finish.
- If battery surface charge is detected while testing, the tester will prompt you to turn on the headlamps to remove the surface charge.
- If necessary, the tester will prompt you to determine if the battery temperature is above or below 0 °C (32 °F). Choose the appropriate selection by pressing the up or down arrow button, then press “ENTER” to make the selection.

1. Turn off all loads on the vehicle electrical system. Clean or repair as necessary.

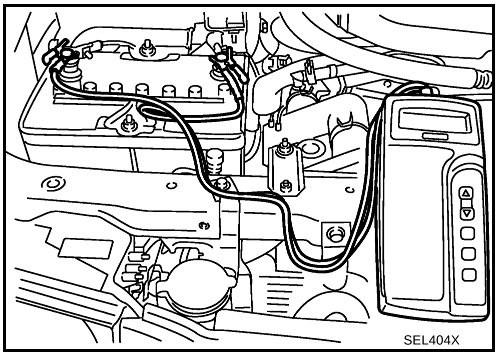
SEL404X

2. Visually inspect the battery, battery terminals and cable ends with ignition switch in “OFF” position.

   NOTE:
   The contact surface between the battery terminals, cable ends and tester leads must be clean for a valid test. A poor connection will prevent testing and a “CHECK CONNECTION” message will appear during the test procedures. If this occurs, clean the battery terminals, reconnect them and restart the test.
3. Connect the red tester lead clamp to the positive battery terminal, and the black to the negative battery terminal.
4. The tester will turn on automatically. Using the arrow keys, select “IN-VEHICLE” on the tester and then press the “ENTER” key.

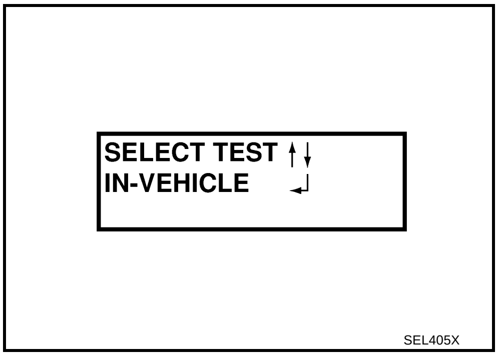

SEL405X

5. Locate the battery type and rating stamped or written on the top case of the battery to be tested.

   NOTE:
   The battery type and rating will have either of the following.
   CCA: Cold Cranking Amps (490 CCA, 550 CCA, etc.)
   JIS: Japanese Industrial Standard.
   Battery is stamped with a number such as:
   80D26L: 80 (rank of output), D (physical size-depth), 26 (width in cm). The last character L (post configuration) is not input into the tester.
   The tester requires the rating for the battery be entered exactly as it is written or stamped on the battery. Do not attempt a CCA conversion for JIS stamped batteries. JIS must be input directly.

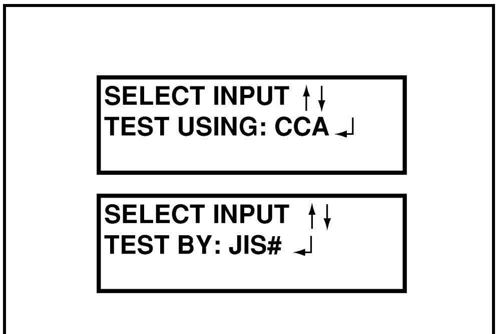

SEL406X

6. Using the arrow and “ENTER” keys alternately, select the battery type and rating.

   NOTE:
   The tester lists five choices; CCA, JIS, IEC, DIN, and EN. Only use CCA or JIS.
7. Press “ENTER” to begin the test. Diagnosis results are displayed on the tester. Refer to SC-8, "DIAGNOSTIC RESULT ITEM CHART" .

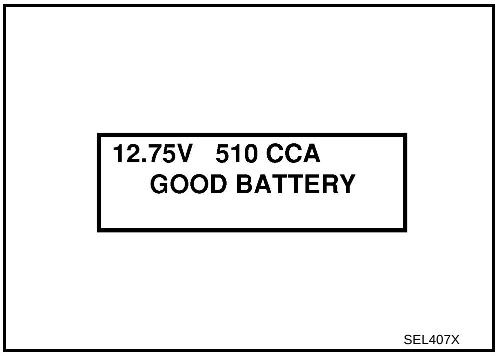

SEL407X

8. Press “ENTER”, then test output code is displayed. Record the test output code on the repair order.
9. Toggle back to the “DIAGNOSTIC SCREEN” for test results.

NOTE:
- If necessary, the tester will ask the user to determine if the battery has just been charged. Choose the appropriate selection by pressing the up or down arrow button and then press the “ENTER” button to make the selection.
- When testing a battery installed in a vehicle that has recently been driven, select “BEFORE CHARGE”.
- If the battery has just been slow charged due to a “CHARGE & RETEST” decision by the tester, and the tester asks the user “BEFORE CHARGE/AFTER CHARGE”, select “AFTER CHARGE”.

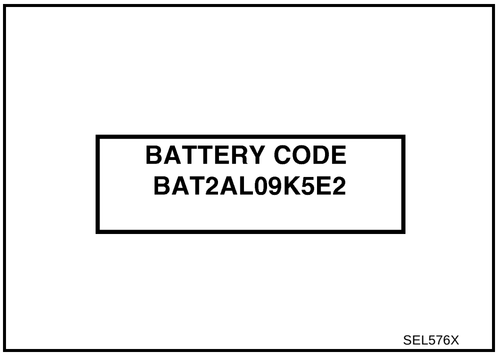

SEL576X

DIAGNOSTIC RESULT ITEM CHART

Diagnostic item	Service procedure
GOOD BATTERY	Battery is OK, go to “Trouble Diagnoses”, “STARTING SYSTEM”. Refer to SC-12, "Trouble Diagnoses with Battery/Starting/Charging System Tester" .
REPLACE BATTERY	Replace battery. Before replacing battery, clean the battery cable clamps and battery terminals. Perform battery test again with Battery/Starting/Charging system tester. If second test result is “Replace Battery”, then do so. Perform battery test again to confirm repair.
BAD CELL-REPLACE	Replace the battery. Perform battery test again with Battery/Starting/Charging system tester to confirm repair.
GOOD-RECHARGE	Perform the slow battery charging procedure. (Initial rate of charge is 10 A for 12 hours.)
CHARGE & RETEST	Perform the slow battery charging. (Initial rate of charge is 10 A for 12 hours.) Perform battery test again with Battery/Starting/Charging system tester to confirm repair. **NOTE:** **If the tester asks the user “BEFORE CHARGE/AFTER CHARGE”, select “AFTER CHARGE”.**

Removal and Installation

AKS00B6P

Observe the following to ensure proper servicing.

CAUTION:
- **When removing, disconnect battery cable at negative terminal first. But for installation, connect battery cable to positive terminal first.**
- **Tighten parts to the specified torque shown below.**

Battery fix frame mounting nut:

: 4.4 N·m (0.45 kg-m, 39 in-lb)

Battery cable tightening nut:

: 4.0 N·m (0.41 kg-m, 35 in-lb)

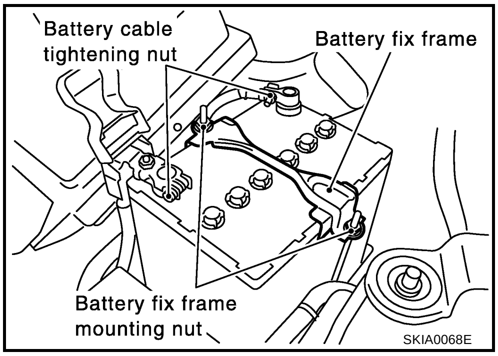

SKIA0068E

STARTING SYSTEM

PFP:00011

System Description

AKS00B6Z

M/T MODELS

Power is supplied at all times

- through 30A fusible link (letter J, located in the fuse and fusible link box)
- to ignition switch terminal 1.

With the ignition switch in the START position, power is supplied

- from ignition switch terminal 5
- to park/neutral position relay terminal 5.

With the ignition switch in the ON or START position, power is supplied

- through 10A fuse [No,13 located in the fuse block (J/B)]
- to park/neutral position relay terminal 1.

With the clutch interlock switch is depressed, ground is supplied

- to park/neutral position relay terminal 2
- through clutch interlock switch terminals 1 and 2, and
- through grounds M27 and M70.

Then park/neutral position relay is energized and power is supplied

- from park/neutral position relay terminal 3
- to starter motor harness connector terminal 1.

The starter motor plunger closes and provides a closed circuit between the battery and starter motor. The starter motor is grounded to engine block. With power and ground supplied, cranking occurs and the engine starts.

A/T MODELS

Power is supplied at all times

- through 30 A fusible link (letter J, located in fuse and fusible link box)
- to ignition switch terminal 1.

With the ignition switch in the START position, power is supplied

- from ignition switch terminal 5
- to park/neutral position relay terminal 5.

With the ignition switch in the ON or START position, power is supplied

- through 10 A fuse [No,13 located in the fuse block (J/B)]
- to park/neutral position relay terminal 1.

With the selector lever in the P or N position, ground is supplied

- to park/neutral position relay terminal 2
- through park/neutral position switch terminals 1 and 2, and
- through grounds F9 and F10.

Then park/neutral position relay is energized and power is supplied

- from park/neutral position relay terminal 3
- to starter motor harness connector terminal 1.

The starter motor plunger closes and provides a closed circuit between the battery and starter motor. The starter motor is grounded to engine block. With power and ground supplied, cranking occurs and the engine starts.

Wiring Diagram — START — / M/T Models

AKS00B70

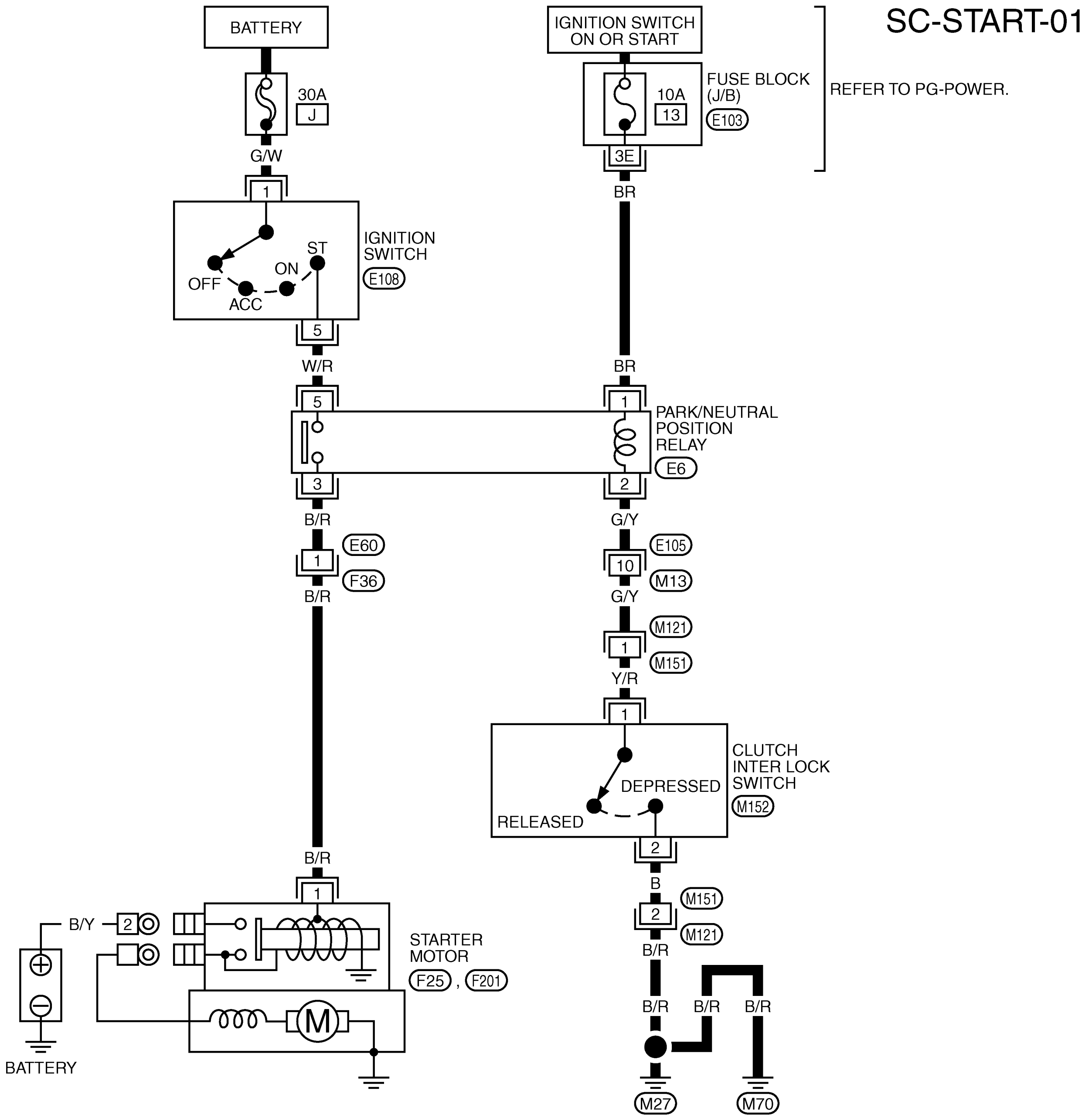

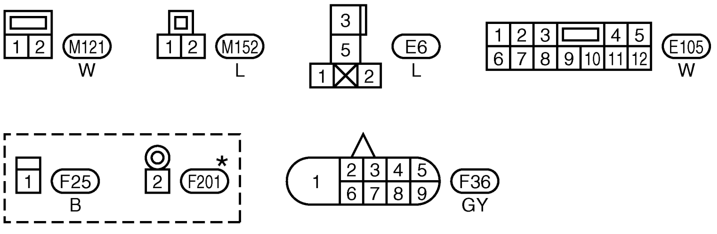

*: THIS CONNECTOR IS NOT SHOWN IN "HARNESS LAYOUT", PG SECTION.

REFER TO THE FOLLOWING.

E103 -FUSE BLOCK-JUNCTION BOX (J/B)

TKWB0147E

Wiring Diagram — START — / A/T Models

AKS00B71

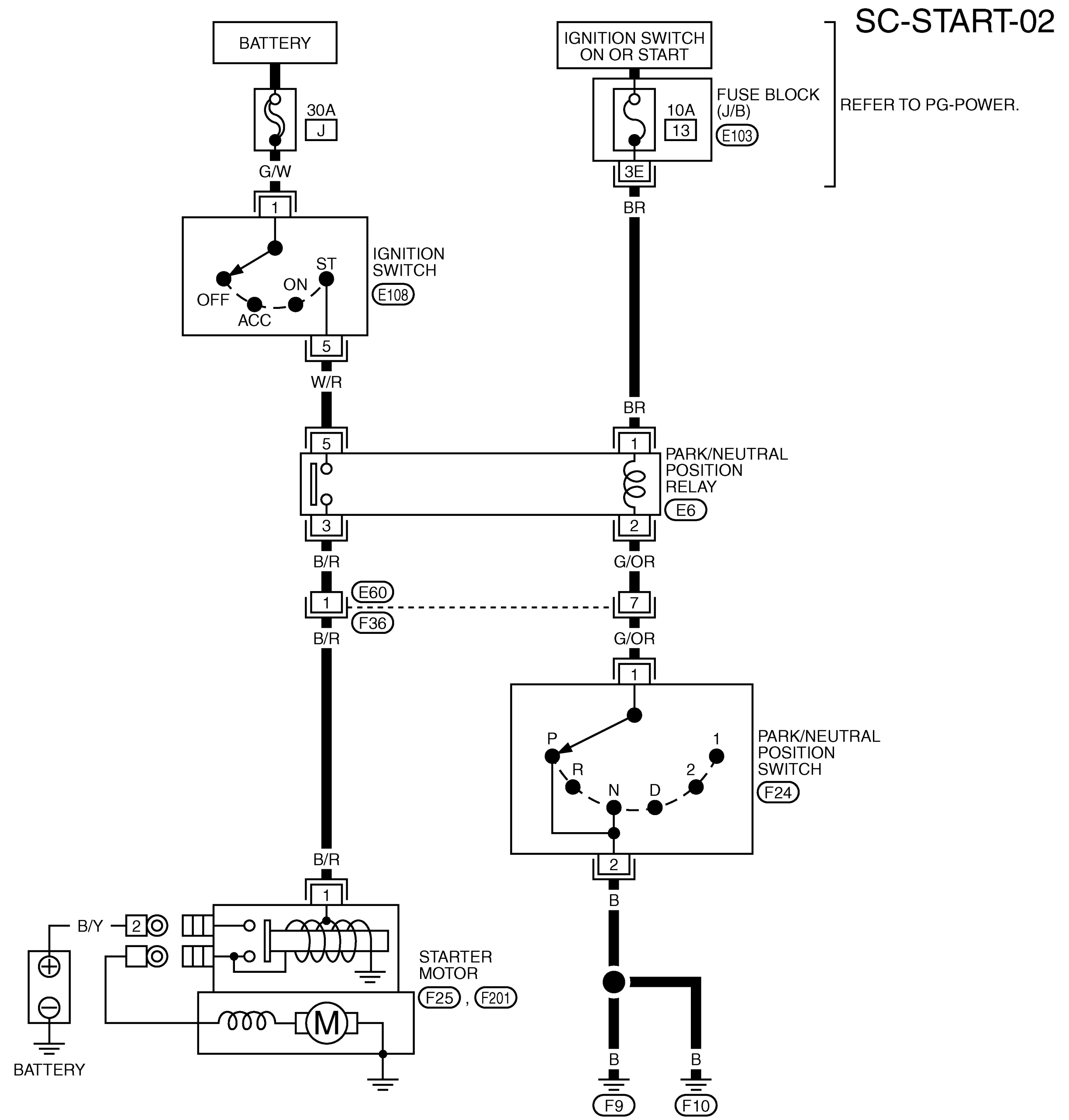

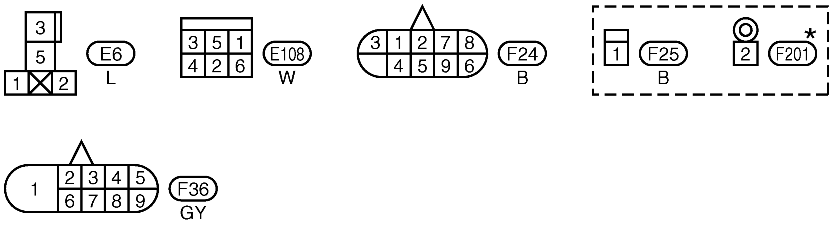

REFER TO THE FOLLOWING.

E103 -FUSE BLOCK-JUNCTION BOX (J/B)

*: THIS CONNECTOR IS NOT SHOWN IN "HARNESS LAYOUT", PG SECTION.

TKWB0148E

Trouble Diagnoses with Battery/Starting/Charging System Tester

AKS00BHH

NOTE:
To ensure a complete and thorough diagnosis, battery, starter and generator test segments must be done as a set from start to finish.

1. Turn off all loads on the vehicle electrical system.
2. Perform battery test with Battery/Starting/Charging system tester. Refer to SC-6, "Trouble Diagnoses with Battery/Starting/Charging System Tester" .
3. Press “ENTER” to begin the starting system test.

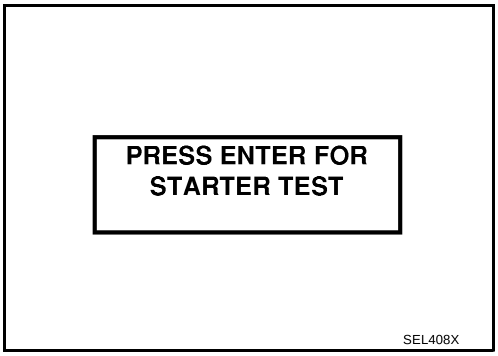

4. Start the engine.

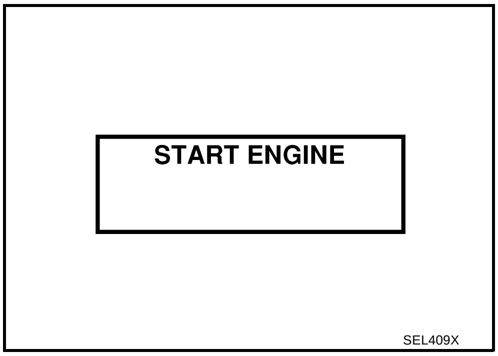

5. Diagnosis result is displayed on the tester. Refer to SC-12, "DIAGNOSTIC RESULT ITEM CHART" .

   NOTE:
   - If starter performs normally but the engine does not start, perform engine diagnosis.
   - For intermittent “NO CRANK” or “NO STARTER OPERATION” incidents, refer to SC-15, "DIAGNOSTIC PROCEDURE 2" .

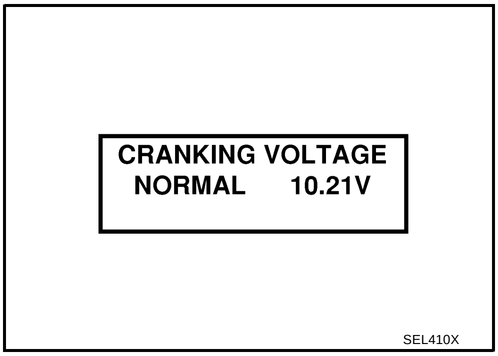

DIAGNOSTIC RESULT ITEM CHART

Diagnostic item	Service procedure
CRANKING VOLTAGE NORMAL	Go to SC-13, "WORK FLOW" .
CRANKING VOLTAGE LOW	
CHARGE BATTERY	Perform the slow battery charging procedure. (Initial rate of charge is 10 A for 12 hours.) Perform battery test again with Battery/Starting/Charging system tester. Refer to SC-6, "Trouble Diagnoses with Battery/Starting/Charging System Tester" .
REPLACE BATTERY	Before replacing battery, clean the battery cable clamps and battery posts. Perform battery test again with Battery/Starting/Charging system tester. Refer to SC-6, "Trouble Diagnoses with Battery/Starting/Charging System Tester" . If second test result is “REPLACE BATTERY”, then do so. Perform battery test again to confirm repair.

WORK FLOW

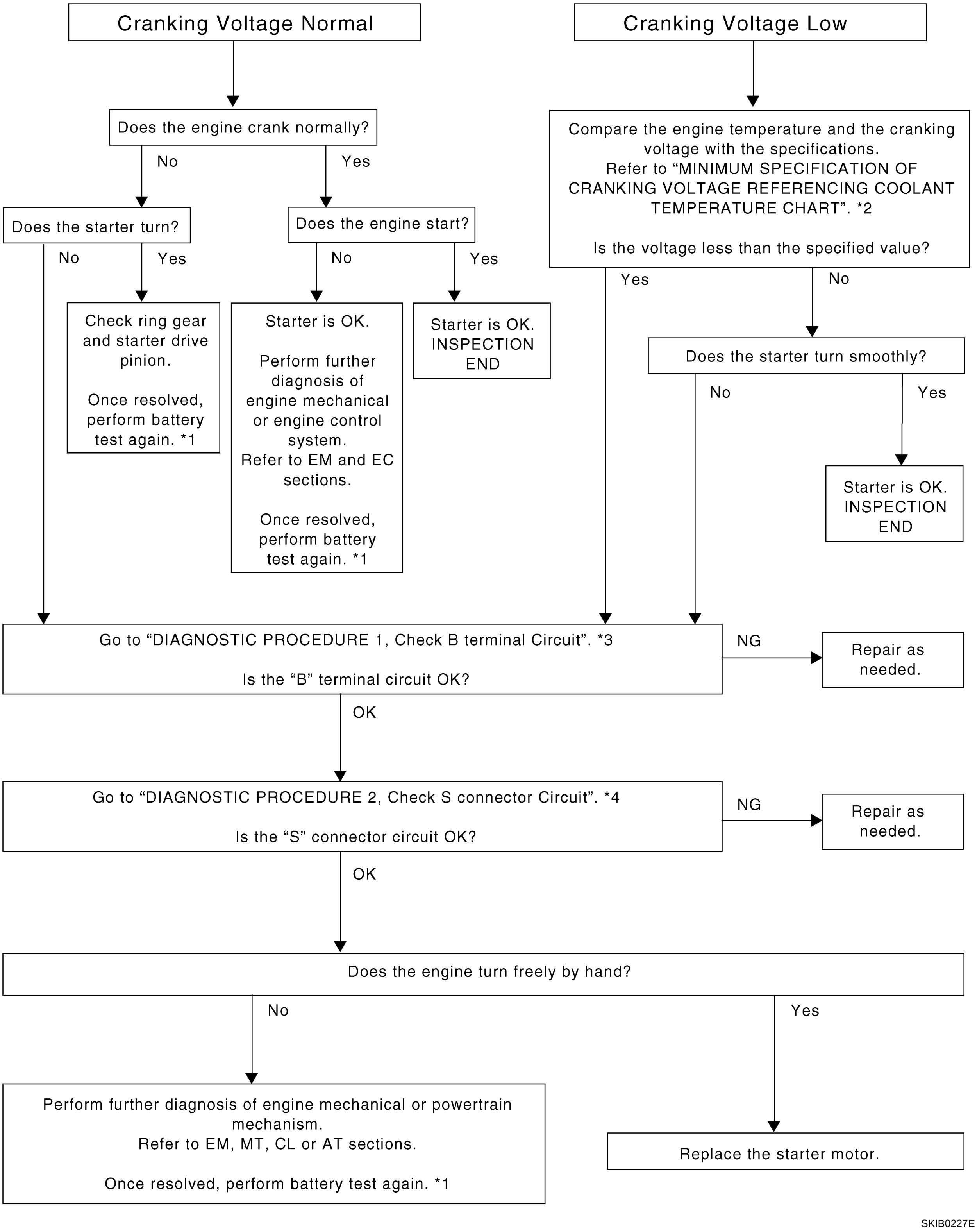

*1 SC-12, "Trouble Diagnoses with Battery/Starting/Charging System Tester"

*2 SC-15, "MINIMUM SPECIFICATION OF CRANKING VOLTAGE REFERENCING COOLANT TEMPERATURE"

*3 SC-14, "Check “B” Terminal Circuit"

*4 SC-15, "Check “S” Connector Circuit"

A B C D E F G H I J SC L M

DIAGNOSTIC PROCEDURE 1

Check “B” Terminal Circuit

1. CHECK POWER SUPPLY FOR STARTER MOTOR “B” TERMINAL

1. Remove fuel pump fuse.
2. Crank or start the engine (where possible) until the fuel pressure is released.
3. Turn ignition switch OFF.
4. Make sure that starter motor B terminal F201 terminal 2 (B/Y) connection is clean and tight.
5. Check voltage between starter motor B terminal F201 terminal 2 (B/Y) and ground using a digital circuit tester.

2 (B/Y) – Ground : Battery voltage

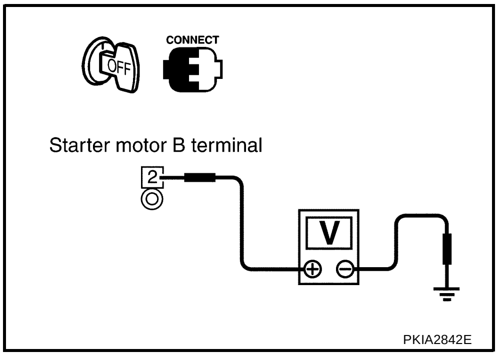

PKIA2842E

OK or NG

OK >> GO TO 2.
NG >> Check harness between battery and starter motor for open circuit.

2. CHECK BATTERY CABLE CONNECTION (VOLTAGE DROP TEST)

1. Shift A/T selector lever to “P” or “N” position. (A/T models)
   Keep depressing clutch pedal fully. (M/T models)
2. Check voltage between starter motor B terminal F201 terminal 2 (B/Y) and battery positive terminal using a digital circuit tester.

2 (B/Y) – Battery positive terminal

When ignition switch is in START position : Less than 0.5 V

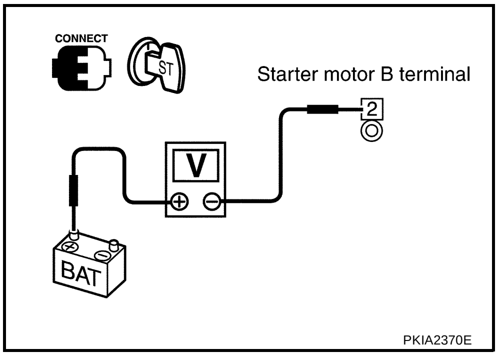

PKIA2370E

OK or NG

OK >> GO TO 3.
NG >> Check harness between battery and starter motor for poor continuity.

3. CHECK STARTER MOTOR GROUND CIRCUIT (VOLTAGE DROP TEST)

1. Shift A/T selector lever to “P” or “N” position. (A/T models)
   Keep depressing clutch pedal fully. (M/T models)
2. Check voltage between starter motor case and battery negative terminal using a digital circuit tester.

Starter motor case – Battery negative terminal

When ignition switch is in START position : Less than 0.2 V

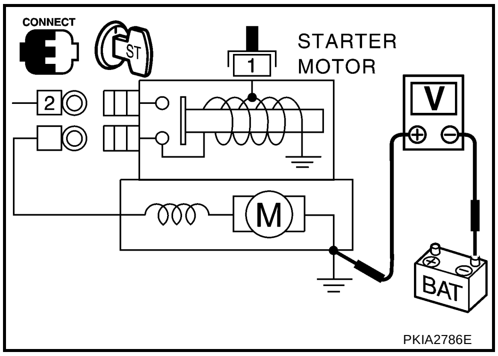

PKIA2786E

OK or NG

OK >> Starter motor “B” terminal circuit is OK. Further inspection necessary. Refer to SC-13, "WORK FLOW" .
NG >> Check starter motor case and ground for poor continuity.

DIAGNOSTIC PROCEDURE 2

Check "S" Connector Circuit

1. CHECK POWER SUPPLY FOR STARTER MOTOR "S" TERMINAL

1. Remove fuel pump fuse.
2. Crank or start the engine (where possible) until the fuel pressure is released.
3. Turn ignition switch OFF.
4. Disconnect starter motor "S" connector.
5. Shift A/T selector lever to "P" or "N" position. (A/T models)
   Keep depressing clutch pedal fully. (M/T models)
6. Check voltage between starter motor harness connector F25 terminal 1 (B/R) and ground using a digital circuit tester.

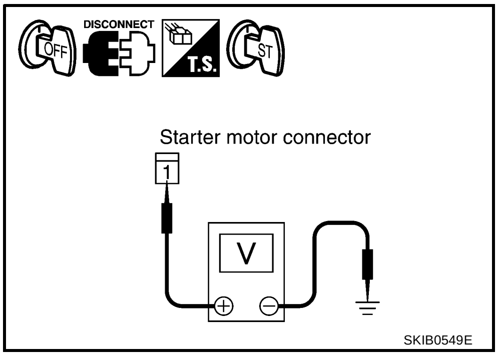

1 (B/R) – Ground

When ignition switch is in START position : Battery voltage

OK or NG

OK >> Starter motor "S" connector circuit is OK. Further inspection necessary. Refer to SC-13, "WORK FLOW" .

NG >> Check the following.

- 30 A fusible link (letter J , located in fuse and fusible link block)
- Ignition switch
- Park/neutral position relay
- Harness for open or short

MINIMUM SPECIFICATION OF CRANKING VOLTAGE REFERENCING COOLANT TEMPERATURE

Engine coolant temperature	Voltage [V]
–30 °C to –20 °C (–22 °F to –4 °F)	8.4
–19 °C to –10 °C (–2 °F to 14 °F)	8.9
–9 °C to 0 °C (16 °F to 32 °F)	9.3
1 °C and higher (34 °F and higher)	9.7

Removal and Installation

AKS00B73

M/T MODELS

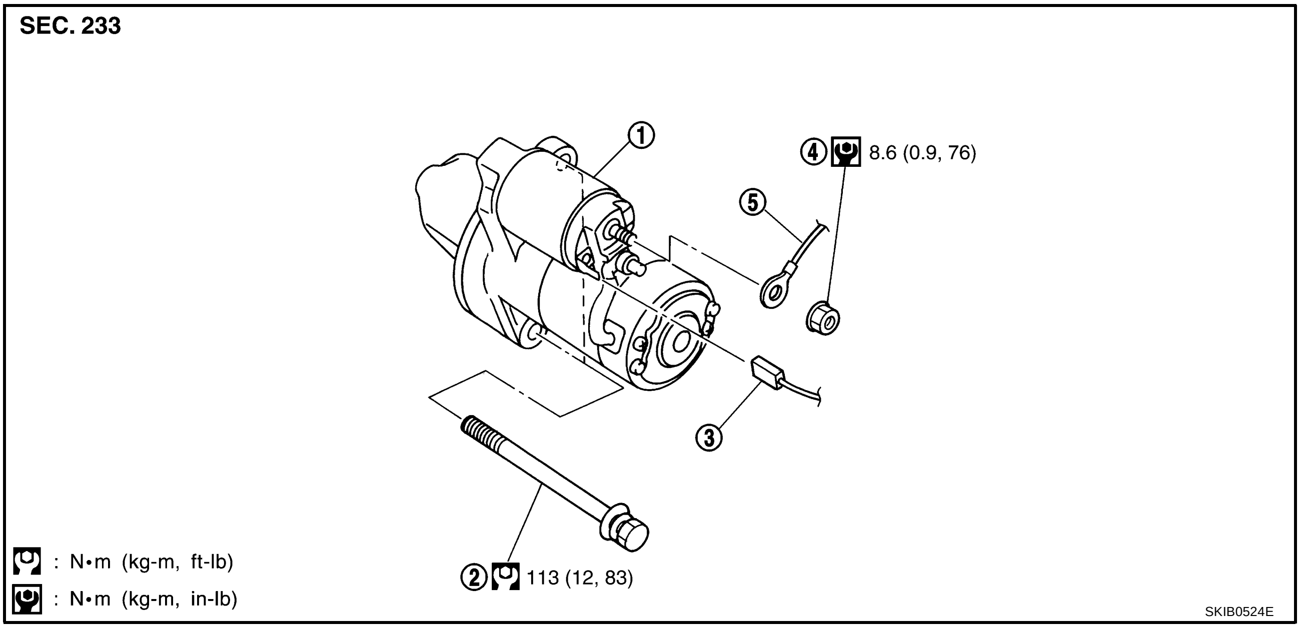

1. Starter motor assembly
2. Starter motor mounting bolt
3. S connector
4. B terminal nut
5. B terminal

Removal

1. Disconnect battery cable at negative terminal.
2. Remove air duct. Refer to EM-14, "AIR CLEANER AND AIR DUCT" .
3. Disconnect “S” connector and “B” terminal from starter motor.
4. Remove starter motor mounting bolts.
5. Remove starter motor upward.

Installation

Installation is the reverse order of removal.

CAUTION:

Be sure to tighten B terminal nut carefully.

A/T MODELS

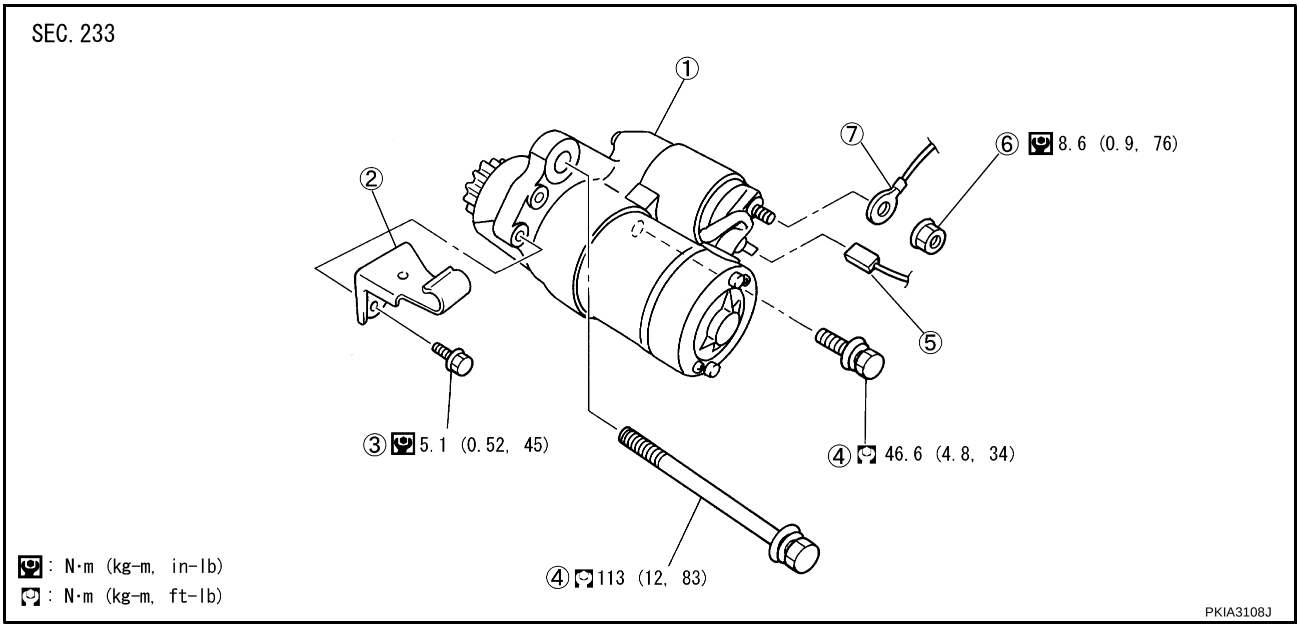

1.	Starter motor assembly	2.	Bracket	3.	Bracket bolt
4.	Starter motor mounting bolt	5.	S connector	6.	B terminal nut
7.	B terminal				

Removal

1. Disconnect battery cable at negative terminal.
2. Remove air duct and air cleaner assembly. Refer to EM-14, "AIR CLEANER AND AIR DUCT" .
3. Remove A/T selector cable and harness from bracket.
4. Disconnect “S” connector and “B” terminal from starter motor.
5. Remove starter motor upward.

Installation

Installation is the reverse order of removal.

CAUTION:

Be sure to tighten B terminal nut carefully.

Disassembly and Assembly

AKS00C3E

M/T MODELS

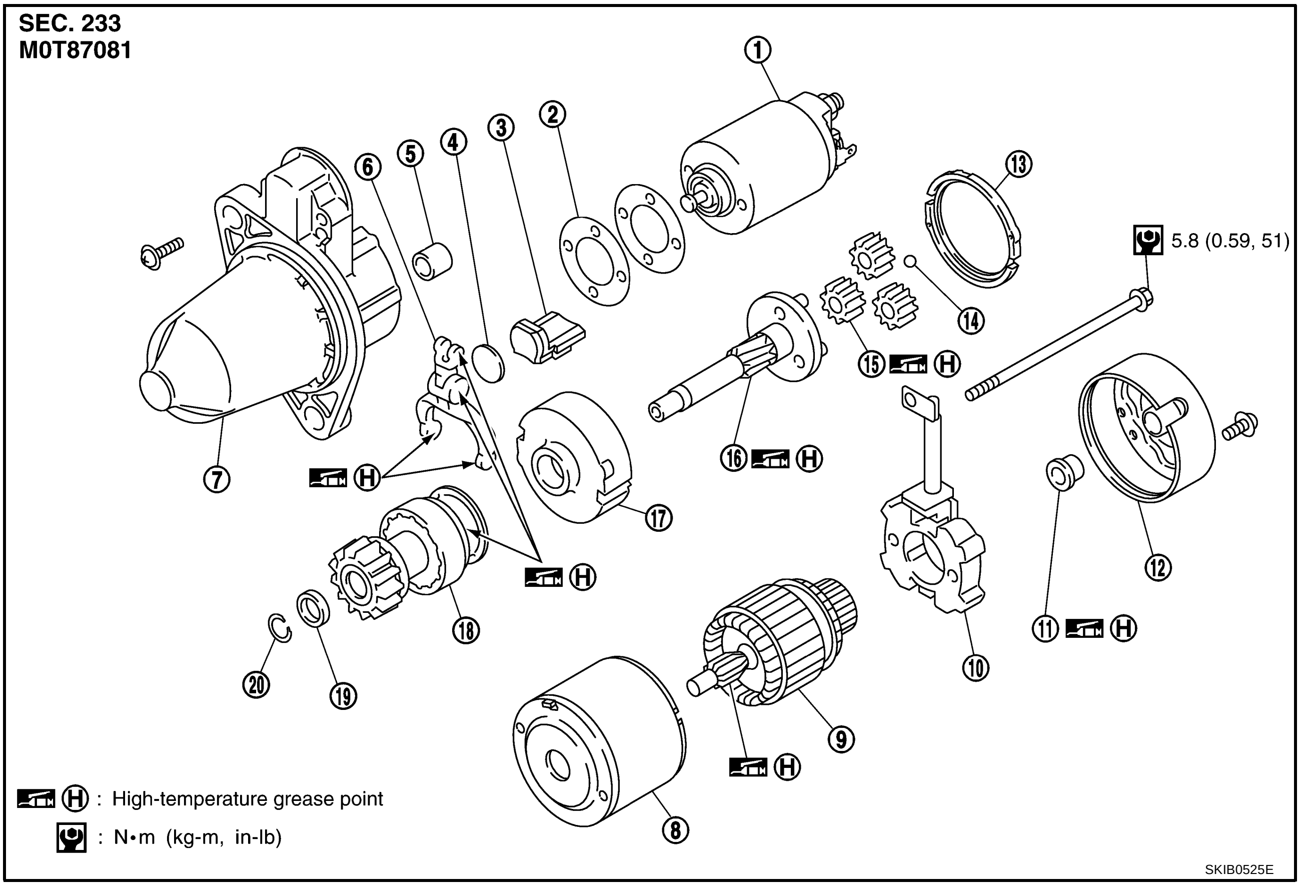

1. Magnetic switch assembly
2. Adjusting plate
3. Packing
4. Plate
5. Sleeve bearing
6. Shift lever
7. Gear case
8. Yoke
9. Armature
10. Brush holder assembly
11. Rear bearing
12. Rear cover
13. Packing
14. Ball
15. Planetary gear
16. Pinion shaft
17. Internal gear
18. Pinion assembly
19. Pinion stopper
20. Stopper clip

A/T MODELS

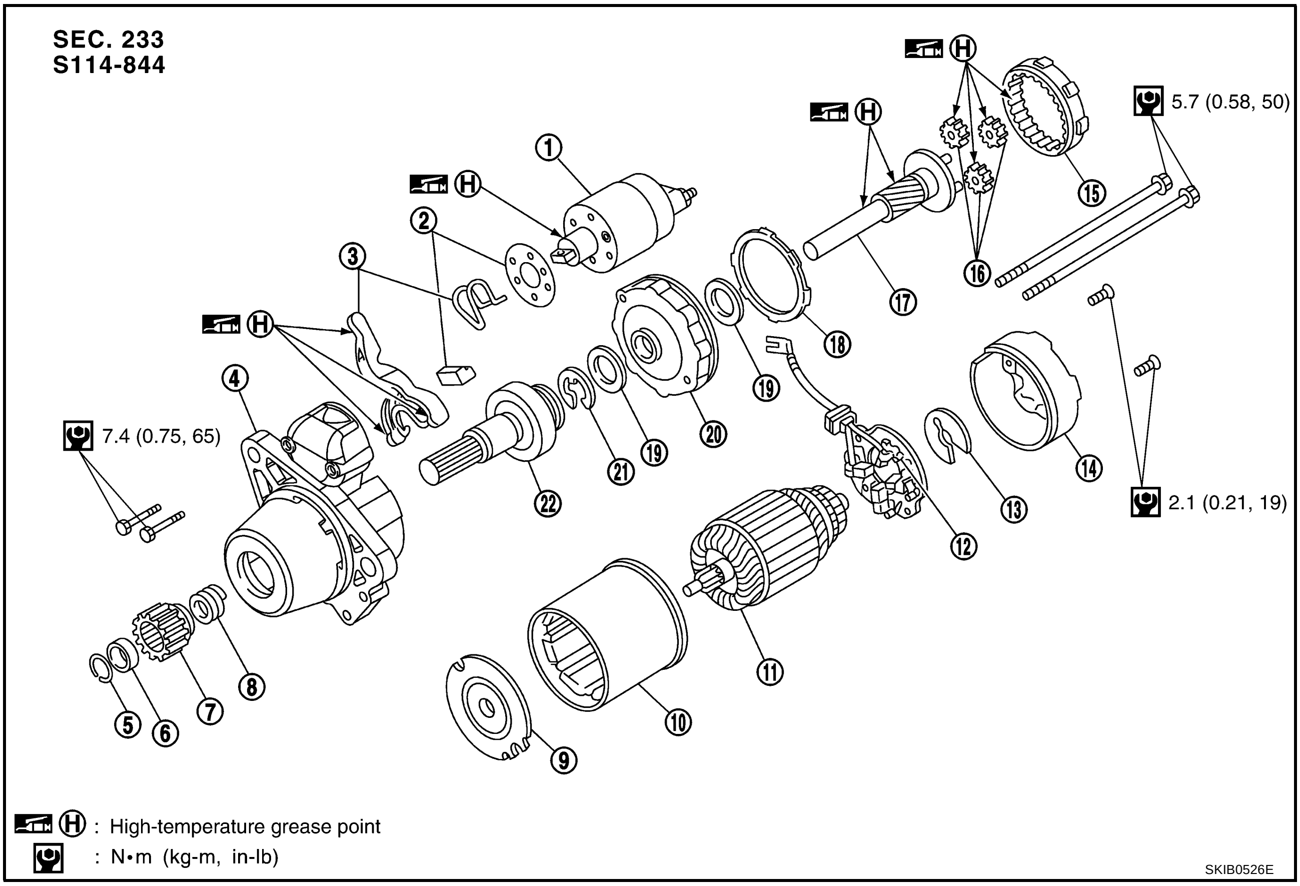

1. Magnetic switch assembly	2. Dust cover kit	3. Shift lever set
4. Gear case	5. Pinion stopper clip	6. Pinion stopper
7. Pinion	8. Pinion spring	9. Center bracket (A)
10. Yoke	11. Armature	12. Brush holder assembly
13. Thrust washer	14. Rear cover	15. Internal gear
16. Planetary gear	17. Pinion shaft	18. Packing
19. Thrust washer	20. Center bracket (P)	21. E-ring
22. Clutch assembly		

INSPECTION AFTER DISASSEMBLY

Pinion/Clutch Check

1. Inspect pinion teeth.
   - Replace pinion if teeth are worn or damaged. (Also check condition of ring gear teeth.)
2. Inspect reduction gear teeth.
   - Replace reduction gear if teeth are worn or damaged. (Also check condition of armature shaft gear teeth.)
3. Check to see if pinion locks in one direction and rotates smoothly in the opposite direction.
   - If it locks or rotates in both directions, or unusual resistance is evident, replace.

CHARGING SYSTEM

PFP:00011

System Description

AKS00B6Q

DESCRIPTION

The alternator provides DC voltage to operate the vehicle's electrical system and to keep the battery charged. The voltage output is controlled by the IC regulator.
Power is supplied at all times

- through 10 A fuse (No. 34, located in the fuse and fusible link box)
- to alternator terminal 4 (“S” terminal).

“B” terminal supplies power to charge the battery and operate the vehicle's electrical system. Output voltage is controlled by the IC regulator at terminal 4 (“S” terminal) detecting the input voltage. The charging circuit is protected by the 120 A fusible link (letter A, located in the fuse and fusible link box).
The alternator is grounded to the engine block.
With the ignition switch in the ON or START position, power is supplied

- through 10 A fuse [No. 11, located in the fuse block (J/B)]
- to combination meter terminal 2 for the charge warning lamp.

Ground is supplied with power and ground supplied

- to terminal 5 of combination meter
- through alternator terminal 3 (“L” terminal)
- to alternator terminal 2 (“E” terminal)
- through ground E30.

The charge warning lamp will illuminate. When the alternator is providing sufficient voltage with the engine running, the ground is opened and the charge warning lamp will go off.
If the charge warning lamp illuminates with the engine running, a malfunction is indicated.

MALFUNCTION INDICATOR

The IC regulator warning function activates to illuminate the charge warning lamp, if any of the following symptoms occur while alternator is operating:

- Excessive voltage is produced.
- No voltage is produced.

Wiring Diagram — CHARGE —

AKS00B6R

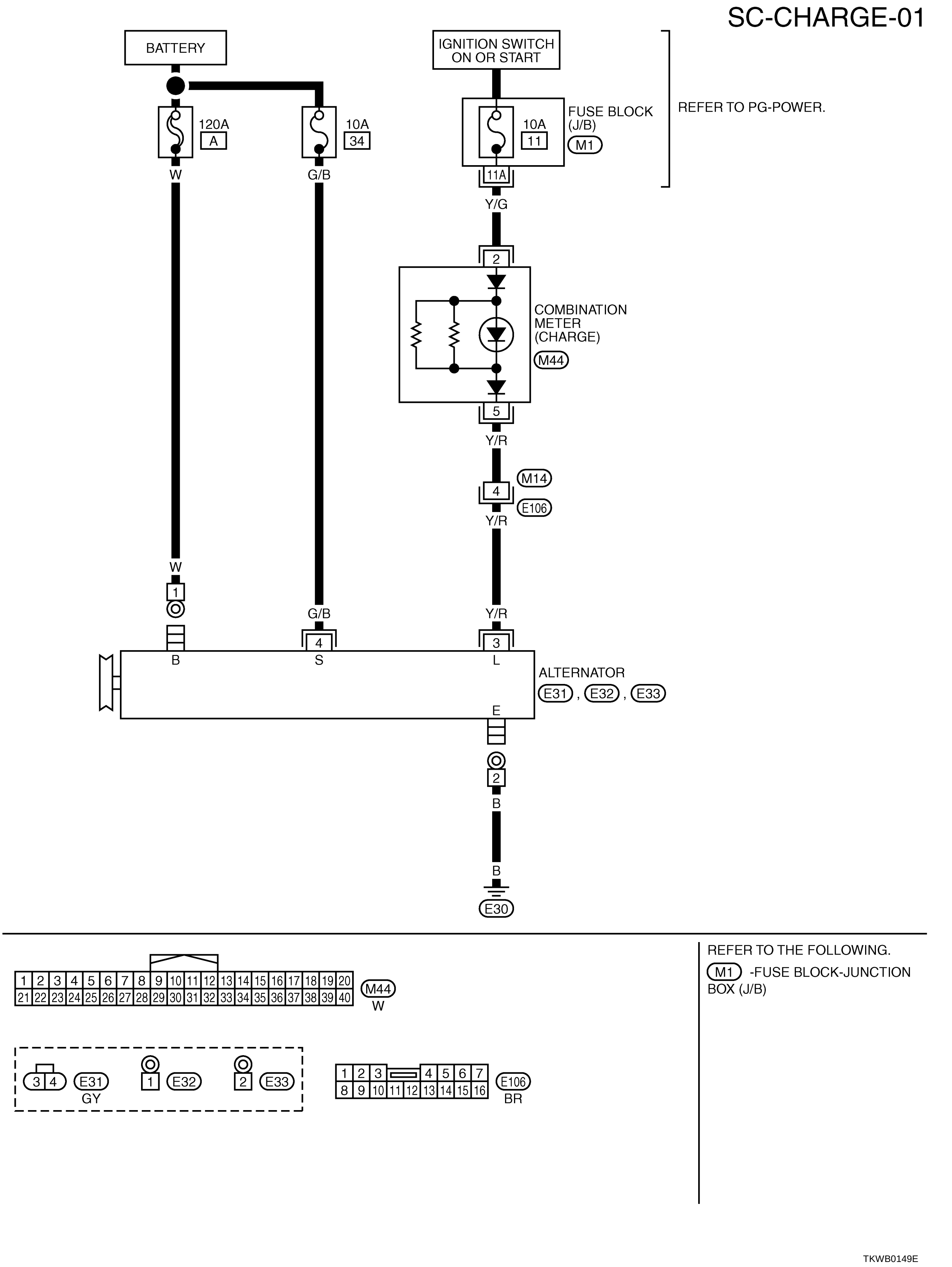

Trouble Diagnoses with Battery/Starting/Charging System Tester

AKS00BHJ

NOTE:
To ensure a complete and thorough diagnosis, battery, starter and alternator test segments must be done as a set from start to finish.
Before starting, perform the preliminary inspection. Refer to SC-25, "PRELIMINARY INSPECTION" .

1. Turn off all loads on the vehicle electrical system.
2. Perform battery and starting system test with Battery/Starting/Charging system tester.
3. Press “ENTER” to begin charging system test.
4. Start engine.

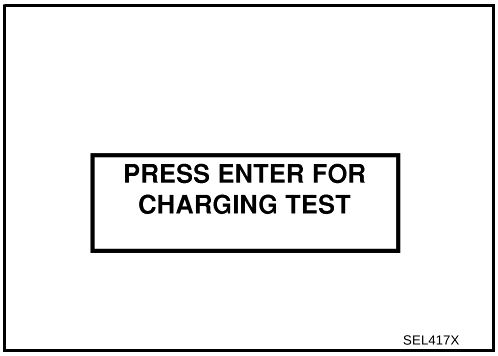

5. Press “ENTER” until “LOADS OFF REV ENGINE 5 SEC” is displayed.
6. Raise and hold the engine speed at 1,500 to 2,000 rpm for about 5 seconds, then return the engine to idle.
   Once the increase in engine rpm is detected, press “ENTER” to continue.
   NOTE:
   - If after 30 seconds an increase in engine idle speed is not detected, “RPM NOT DETECTED” will display.
   - Some engines may have a higher idle initially after starting, particularly when the engine is cold. The tester may detect this without any other action being taken. If this occurs, continue on with the testing process. The final results will not be affected.

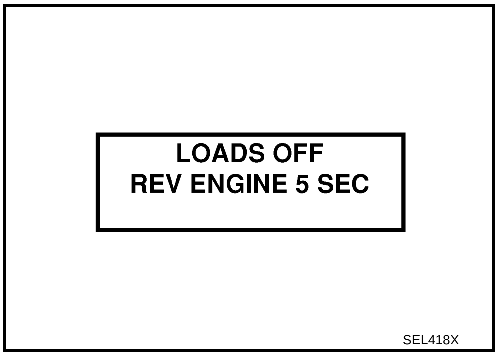

7. The tester now checks the engine at idle and performs the DIODE/RIPPLE check.
8. When complete, the tester will prompt you to turn on the following electrical loads.
   - Heater fan set to highest speed. Do not run the A/C or windshield defroster.
   - Headlamp high beam
   - Rear window defogger

   NOTE:
   Do not run the windshield wipers or any other cyclical loads.

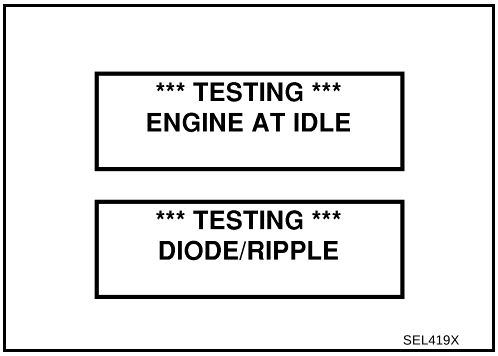

9. Press “ENTER” to continue.

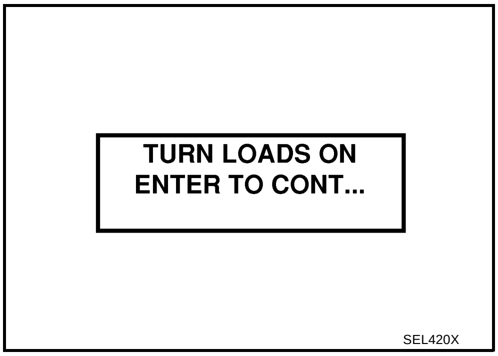

10. Raise and hold the engine speed at 1,500 to 2,000 rpm for about 5 seconds, then return the engine to idle. Once the increase in engine rpm is detected, press “ENTER” to continue.

    NOTE:
    If after 30 seconds an increase in engine idle speed is not detected, “RPM NOT DETECTED” will be displayed. Press “ENTER” to restart the test.

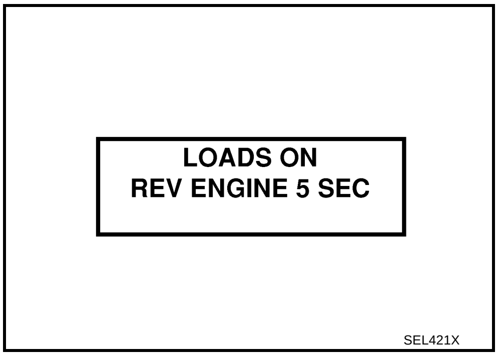

11. Diagnostic result is displayed on the tester. Refer to SC-23, "DIAGNOSTIC RESULT ITEM CHART" .

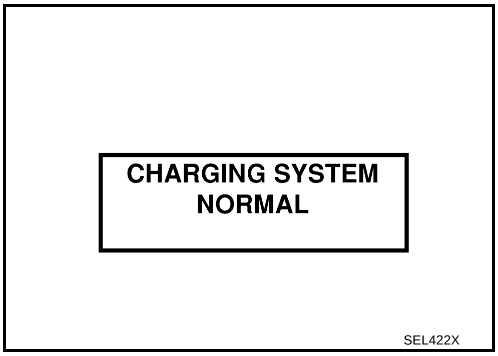

12. Press “ENTER” then test output code is displayed. Record the test output code on the repair order.
13. Toggle back to the “DIAGNOSTIC SCREEN” for test results.

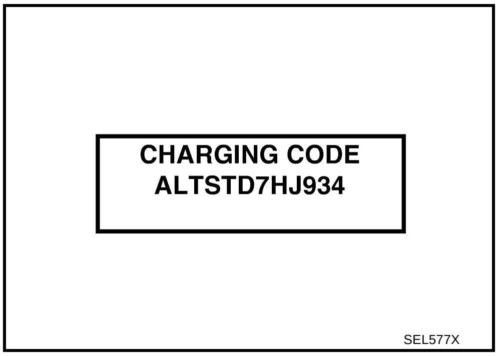

DIAGNOSTIC RESULT ITEM CHART

Diagnostic item	Service procedure
CHARGING SYSTEM NORMAL	Charging system is normal and will also show DIODE RIPPLE test result.
NO CHARGING VOLTAGE	Go to SC-24, "WORK FLOW" .
LOW CHARGING VOLTAGE	
HIGH CHARGING VOLTAGE	
DIODE RIPPLE NORMAL	Diode ripple is OK and will also show CHARGING VOLTAGE test result.
EXCESS RIPPLE DETECTED	Replace alternator. Perform “DIODE RIPPLE” test again using Battery/Starting/Charging system tester to confirm repair.
DIODE RIPPLE NOT DETECTED	Go to SC-24, "WORK FLOW" .

WORK FLOW

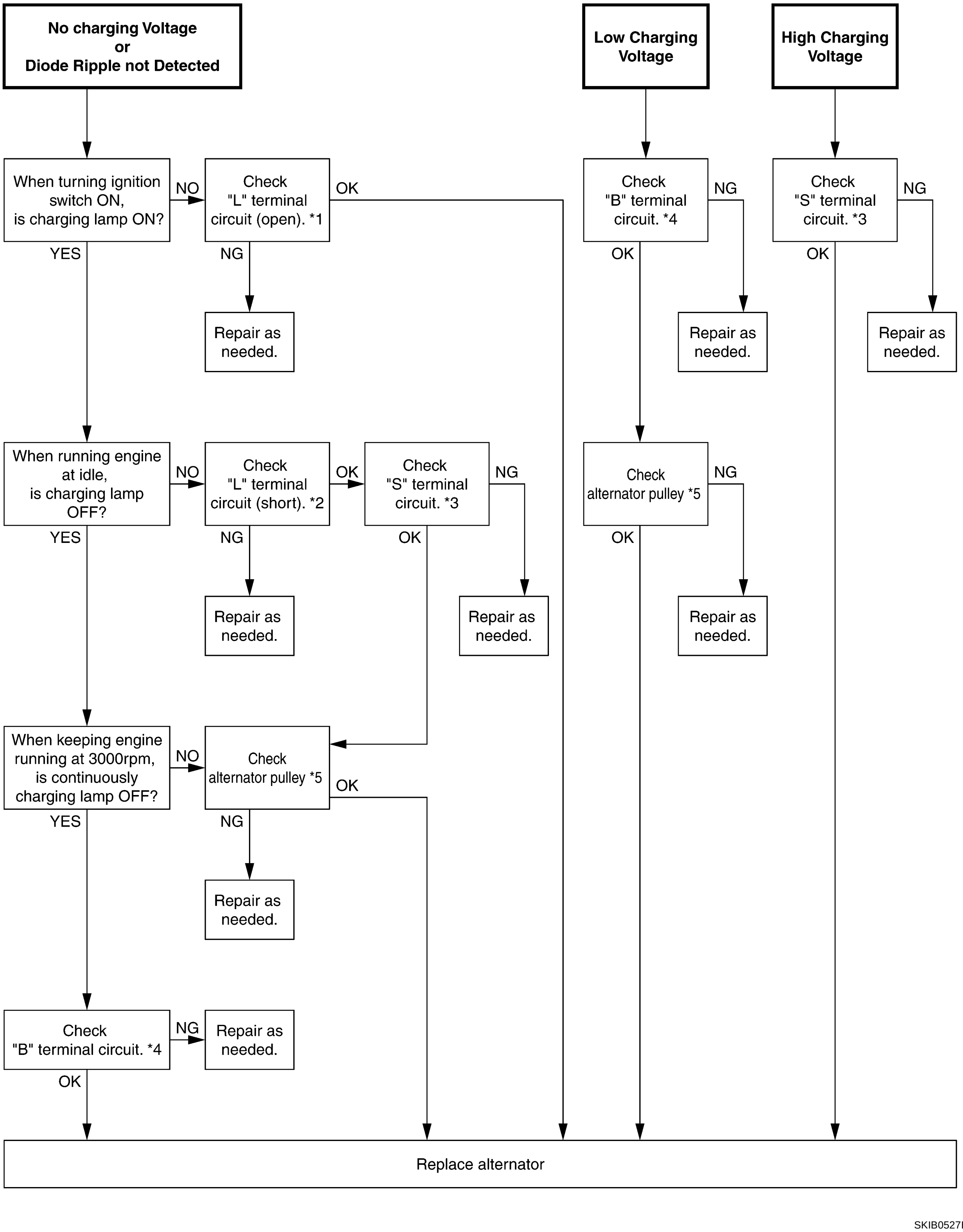

*1 SC-26, "Check “L” Terminal Circuit (Open)"
*2 SC-26, "Check “L” Terminal Circuit (Short)"
*3 SC-27, "Check “S” Terminal Circuit"
*4 SC-28, "Check “B” Terminal Circuit"
*5 SC-29, "ALTERNATOR PULLEY INSPECTION"

PRELIMINARY INSPECTION

1. CHECK BATTERY TERMINALS CONNECTION

Check if battery terminals is clean and tight.

OK or NG

OK >> GO TO 2.
NG >> Repair battery terminals connection.

2. CHECK FUSE AND FUSIBLE LINK

Check for blown fuse and fusible link. Refer to PG-50, "FUSE AND FUSIBLE LINK BOX" .

Unit	Power source (Power supply terminals)	Fuse and fusible link No.
Alternator	Battery (“B” terminal)	A
	Battery (“S” terminal)	34
Combination meter	Ignition switch ON (“L” terminal)	11

OK or NG

OK >> GO TO 3.
NG >> If fuse is blown, be sure eliminate cause of malfunction before installing new fuse.

3. CHECK “E” TERMINAL CONNECTION

Check if “E” terminal is clean and tight.

OK or NG

OK >> GO TO 4.
NG >> Repair “E” terminal connection.

4. CHECK ALTERNATOR DRIVE BELT TENSION

Check alternator drive belt tension. Refer to EM-11, "Checking Drive Belt" .

OK or NG

OK >> INSPECTION END
NG >> Repair as needed.

DIAGNOSTIC PROCEDURE 1

Check “L” Terminal Circuit (Open)

1. CHECK “L” TERMINAL CONNECTION

1. Turn ignition switch OFF.
2. Check if “L” terminal is clean and tight.

OK or NG

OK >> GO TO 2.
NG >> Repair “L” terminal connection. Confirm repair by performing complete Battery/Starting/Charging system test.

2. CHECK “L” TERMINAL CIRCUIT (OPEN)

1. Disconnect alternator connector.
2. Apply ground to alternator harness connector E31 terminal 3 (Y/R) with ignition switch in the ON position.

3 (Y/R) – Ground : Charge warning lamp should light up.

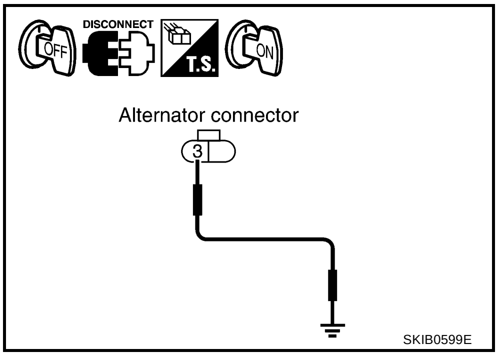

OK or NG

OK >> Go to SC-24, "WORK FLOW" .
NG >> Check the following.
- Harness for open between combination meter and alternator
- Harness for open between combination meter and fuse
- Charge warning lamp (Combination meter)

DIAGNOSTIC PROCEDURE 2

Check “L” Terminal Circuit (Short)

1. CHECK “L” TERMINAL CIRCUIT (SHORT)

1. Turn ignition switch OFF.
2. Disconnect alternator connector.
3. Turn ignition switch ON.

Charge warning lamp should light up?

YES >> Check the following.
- Harness for short between combination meter and alternator
- Charge warning lamp (Combination meter)

NO >> Go to SC-24, "WORK FLOW" .

DIAGNOSTIC PROCEDURE 3

Check “S” Terminal Circuit

1. CHECK “S” TERMINAL CONNECTION

1. Turn ignition switch OFF.
2. Check if “S” terminal is clean and tight.

OK or NG

OK >> GO TO 2.

NG >> Repair “S” terminal connection. Confirm repair by performing complete Battery/Starting/Charging system test.

2. CHECK ALTERNATOR “S” TERMINAL CIRCUIT

Check voltage between alternator harness connector E31 terminal 4 (G/B) and ground using a digital circuit tester.

4 (G/B) – Ground : Battery voltage

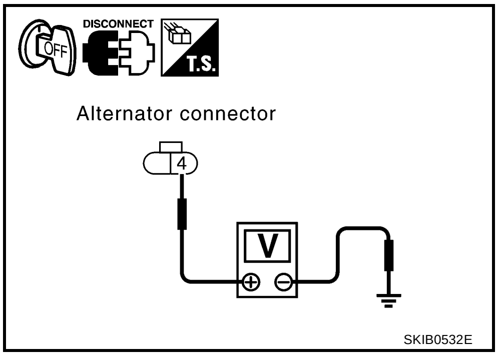

OK or NG

OK >> Go to SC-24, "WORK FLOW" .

NG >> Harness for open between alternator and fuse.

A B C D E F G H I J SC L M

DIAGNOSTIC PROCEDURE 4

Check “B” Terminal Circuit

1. CHECK “B” TERMINAL CONNECTION

1. Turn ignition switch OFF.
2. Check if “B” terminal is clean and tight.

OK or NG

OK >> GO TO 2.
NG >> Repair “B” terminal connection. Confirm repair by performing complete Battery/Starting/Charging system test.

2. CHECK ALTERNATOR “B” TERMINAL CIRCUIT

Check voltage between alternator “B” terminal E32 terminal 1 (W) and ground using a digital circuit tester.

1 (W) – Ground : Battery voltage

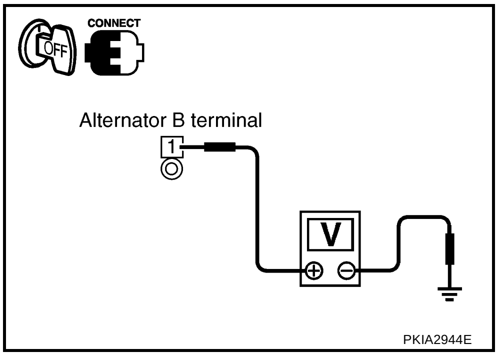

OK or NG

OK >> GO TO 3.
NG >> Check harness for open between alternator and fusible link.

3. CHECK “B” TERMINAL CONNECTION (VOLTAGE DROP TEST)

1. Start engine.
2. When engine running at idle and warm, check voltage between alternator “B” terminal E32 terminal 1 (W) and battery positive terminal using a digital circuit tester.

1 (W) – Battery positive terminal : Less than 0.2 V

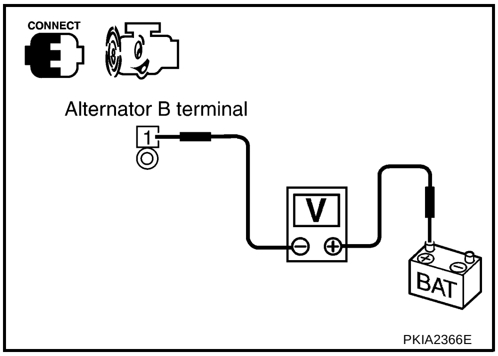

OK or NG

OK >> Go to SC-24, "WORK FLOW" .
NG >> Check harness between battery and alternator for poor continuity.

Removal and Installation

AKS00C3D

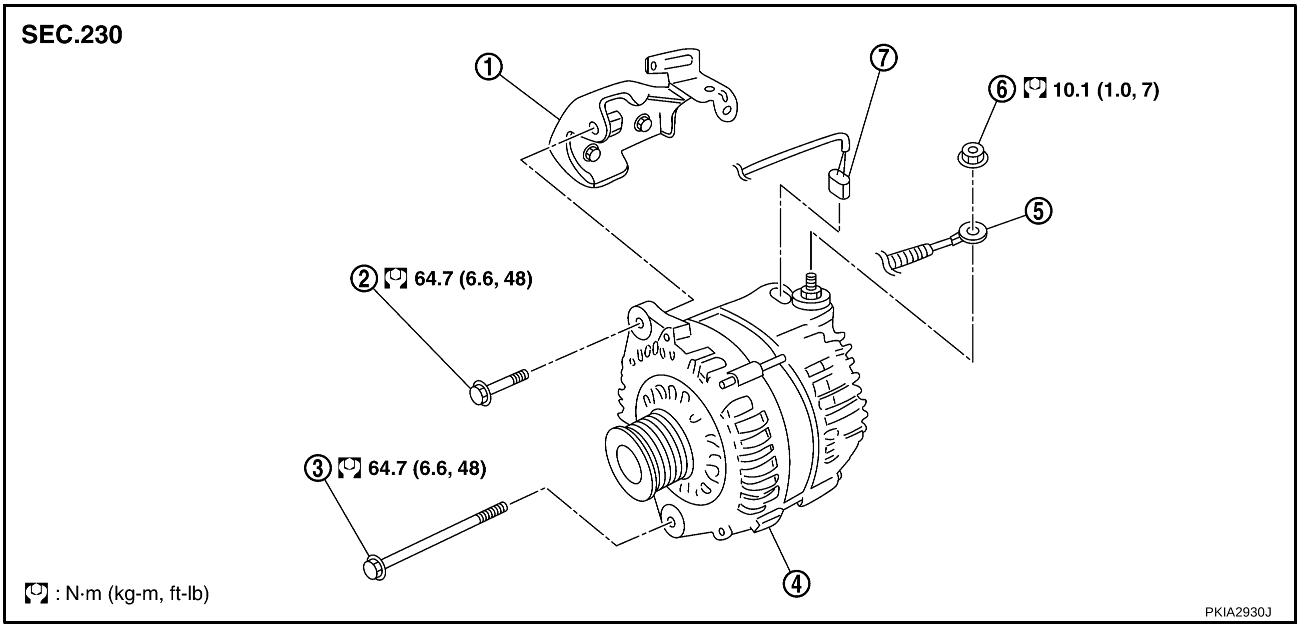

1.	Alternator bracket	2.	Alternator mounting bolt	3.	Alternator mounting bolt
4.	Alternator assembly	5.	B terminal	6.	B terminal mounting nut
7.	Alternator connector				

REMOVAL

1. Disconnect battery cable at negative terminal.
2. Remove alternator drive belt. Refer to EM-11, "Checking Drive Belt" .
3. Remove alternator harness mounting bolt, ground mounting bolt, alternator connector and “B” terminal mounting nut.
4. Remove alternator mounting bolts.
5. Remove alternator bracket.
6. Remove alternator assembly upward.

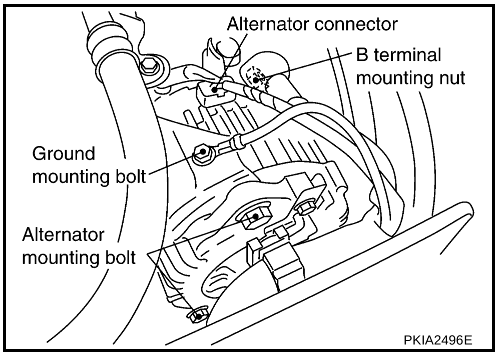

ALTERNATOR PULLEY INSPECTION

One-Way Clutch Pulley Check

Fix rotor with inserting a suitable tool rolled with a cloth.

CAUTION:

Be careful not to damage the rotor.

1. Check for locking. (Outer ring is turned clockwise when viewed from the front.)
   - If it rotates in both directions... Replace pulley.
2. Check for dragging. (Outer ring is turned counterclockwise when viewed from the front.)
   - If it locks or unusual resistance is felt... Replace pulley.

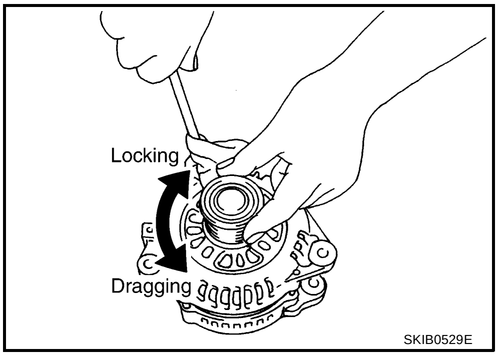

INSTALLATION

Note the following, and installation is the reverse order of removal.

- Install alternator, and check tension of belt. Refer to EM-11, "Tension Adjustment" .

CAUTION:

Be sure to tighten B terminal mounting nut carefully.

Disassembly and Assembly

AKS00C3C

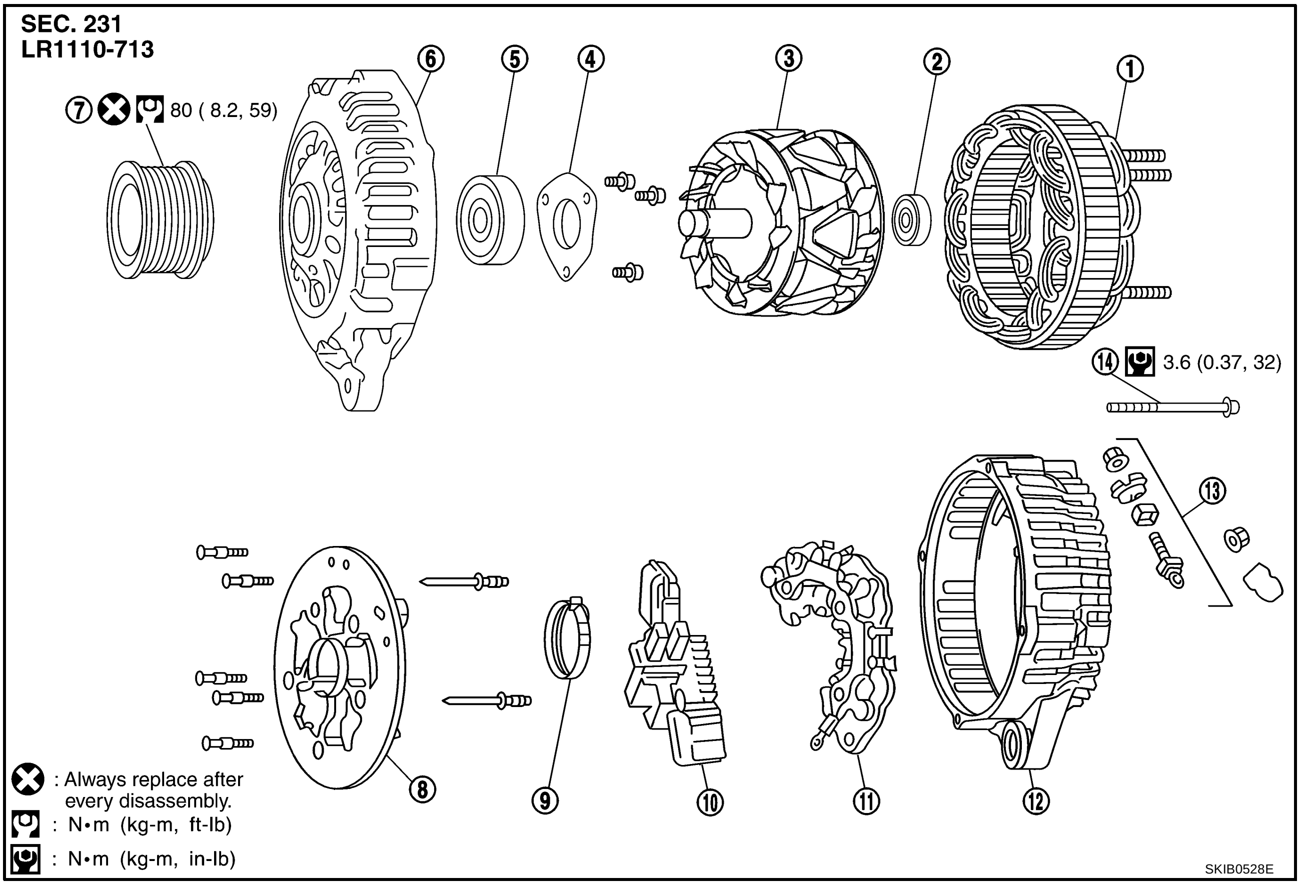

1. Stator	2. Rear bearing	3. Rotor
4. Retainer	5. Front bearing	6. Front cover
7. Pulley	8. Fan guide	9. Labyrinth seal
10. IC voltage regulator assembly	11. Diode assembly	12. Rear cover
13. Terminal assembly	14. Through-bolt	

DISASSEMBLY FOR ALTERNATOR PULLEY

1. Remove through-bolt (4).
2. Remove rear cover.

   NOTE:

   Rear cover may be hard to remove because a ring is used to lock outer race of rear bearing. To facilitate removal of rear cover, heat just bearing box section with a 200 W soldering iron until the temperature increases by about 30 °C.

   CAUTION:

   Do not use a heat gun, as it can damage diode assembly.

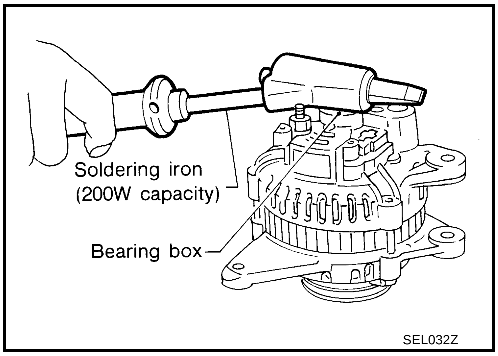

3. Set rotor to the vise.

   CAUTION:
   - **Be careful not to damage the rotor.**
   - **Use copper plate or thick cloth for rotor in the vise.**
4. Remove pulley cap, using suitable tool.

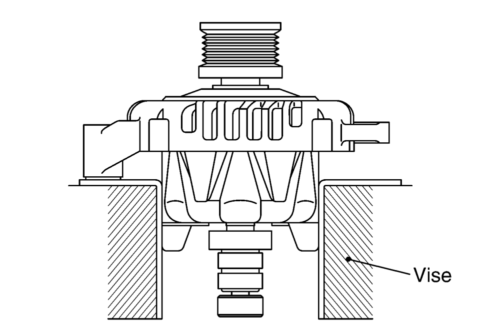

SKIB0531E

5. Remove alternator pulley, using alternator pulley adaptor [SST].

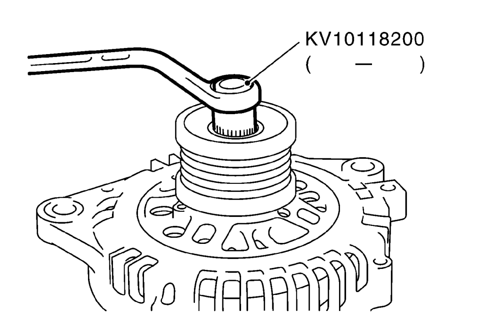

SKIB0731E

ASSEMBLY FOR ALTERNATOR PULLEY

Assembly is the reverse order of disassemble.

CAUTION:

Note the tightening torque shown, in the figure.

SERVICE DATA AND SPECIFICATIONS (SDS)

PFP:00030

Battery

AKS00B77

Applied mode		QR25 engine
Type		80D23L
Capacity	[V - AH]	12 - 52
Cold cranking current (For reference value)	[A]	589

Starter

AKS00B78

Applied model			QR25 engine	
			A/T	M/T
Type			S114-844	M0T87081
			HITACHI make	MITSUBISHI make
			Reduction	
System voltage		[V]	12	
No-load	Terminal voltage	[V]	11.0	
	Current	[A]	Less than 90	
	Revolution	[rpm]	More than 2,700	More than 2,500
Minimum diameter of commutator		[mm (in)]	28.0 (1.102)	28.8 (1.134)
Minimum length of brush		[mm (in)]	10.5 (0.413)	7.0 (0.276)
Brush spring tension		[N (kg, lb)]	16.2 (1.65, 3.64)	21.7 (2.2, 4.9)
Clearance between bearing metal and armature shaft		[mm (in)]	Less than 0.2 (0.008)	
Clearance between pinion front edge and pinion stopper		[mm (in)]	—	0.5 - 2.0 (0.020 - 0.079)
Movement in height of pinion assembly		[mm (in)]	0.3 - 2.5 (0.012 - 0.098)	—

Alternator

AKS00B79

Applied model		QR25 engine
Type		LR1110-713
		HITACHI make
Nominal rating	[V - A]	12 - 110
Ground polarity		Negative
Minimum revolutions under no-load (When 13.5 V is applied)	[rpm]	Less than 1,100
Hot output current (When 13.5V is applied)	[A/rpm]	(More than 35/1,300) More than 70/1,800 More than 91/2,500 More than 110/5,000
Regulated output voltage	[V]	14.1 - 14.7
Minimum length of brush	[mm (in)]	More than 6.0 (0.236)
Brush spring pressure	[N (kg, lb)]	1.0 - 3.43 (102 - 350, 3.60 - 12.34)
Slip ring minimum diameter	[mm (in)]	More than 26.0 (1.024)
Rotor coil resistance at 20°C (68°F)	[Ω]	2.31